KLUBB
LA CONFIANCE À SON PLUS HAUT NIVEAU

USER MANUAL

K32 / K26 / K21

Type 1B elevator

ORIGINAL MANUAL

Table of contents

I. INTRODUCTION 5
II. GENERAL INFORMATIONS 6
A. Included documentation 6
B. Booklet datas 6
C. Receiver 6
D. Informations property 6
E. Specific terms 7
F. General Characteristics 8
➢ Dimensional spécifications 8
G. Allowed and not allowed uses 11
➢ Allowed uses 11
➢ Not allowed uses 11
➢ Cases where the builder will not be liable 11
➢ Load limiter 11
H. MEPP identification data 12
I. Declaration of compliance 13
J. Warranty 14
➢ Terms and conditions 14
➢ Request for intervention under warranty and arrangements 14
K. Aftersale service 15
➢ Intervention request 15
L. Utilisation of the manual 15
III. SAFETY INFORMATIONS 16
A. Safety standards 16
B. Operators capability 16
C. Signaling 17
D. General safety instructions 17
E. Before starting to work 19
F. While working 19
G. While finishing or interrupting work 20
H. Security measures while maintenance 21
IV. TECHNICAL DESCRIPTIVE 22
A. Parts of the lift 22
V. ACTIVATION 26
B. Position and description of the main elements 28
C. Elevator's operation 32
VI. EMERGENCY PROCEEDINGS 34

A. Emergency shutdown 34
B. Emergency pump 34
C. Overriding 34
D. Hydraulic distributors 35
E. Outriggers driving 36
VII. MAINTENANCE 39
A. Daily checkings 40
B. Weekly checkings 41
C. Bimonthly checkings 41
D. Biannual checkings 41
E. Compulsory maintenance after 1 year or 500h of use (whichever comes first) 41
F. Hydraulic oils / filters 43
G. Greassings 43
➢ Slew ring 43
H. Guarantee claim 43
I. Diagnostic 43
VIII. DISMANTLING AND REMOVAL 47
A. Operator's ability 47
B. Dismantling the equipment 47
C. Dismantling procedure 47
D. Remaining risks after dismantling 47
IX. HYDRAULIC AND ELECTRIC SCHEMES 48
A. Hydraulic scheme 48
B. Wiring diagrams 49
A. Instructions for editing 50
B. Delivery of the elevator to the owner 50
C. Transfers of ownership 51
D. Parts change 52
E. Safety parts renewal 55
F. Checkings / repairs / maintenance 58
G. Notes 63

I. INTRODUCTION

Thanks for choosing **KLUBB**, This elevator has been made to provide to its users the best equipment for works in height. With the full control panel available in the bucket and the various movements of the boom, you have now a great tool, flexible and efficient.

Each user must always remember that this equipment requires a regular upkeep very important to keep its efficiency, to avoid deterioration and increase its lifetime.

This manual is made to provide essential informations to make the use of the lift efficient and secure. The correct use of this elevator require a good comprehension of its capacities. Using this elevator make the user responsible, we recomend reading carefully these instructions before starting to use the lift.

WARNING :

- **THIS MANUAL IS PART OF THE ELEVATOR AND MUST ALWAYS REMAIN AVAILABLE TO THE USER.**
- **READ THIS MANUAL CAREFULLY BEFORE STARTING TO USE THE ELEVATOR.**

In a quest of perpetual improvement, **KLUBB** reserves the right to modify the technical characteristics of its elevators without any obligation to upgrade any of the goods already sold.

Your satisfaction is very important for **KLUBB**, many cares have been given to this manual to make it as complete and useful as possible.

II. GENERAL INFORMATIONS

A. Included documentation

- User manual (this booklet)
- Electric and hydraulic schemes

B. Booklet datas

Uer manual : Working lift

Models : K32 / K26 / K21

Note : Some of the pictures and drawings in this manual may not comply to the customer equipment. However, they always give all the necessary informations to allow understanding of the instructions.

C. Receiver

- User
- Upkeep technician

Warning : Every receiver of this booklet, especially technicians dedicated to assembly and disassembly of this equipement, must observe the instructions given in this manual and especially keep from making any of the operations specified as to be made by **KLUBB** or a company certified by **KLUBB**.

D. Informations property

This document contains informations from reserved property. All rights reserved. This manual cannot be copied fully or partially without a written authorisation from the company. The use of this manual is allowed only to the customer recipent of the equipment with this manual andd only for its use and upkeep. The company certify that the informations given in this manual complies to the technical and security instructions of the equipment described in this booklet.

The builder cannot be responsible for any harm or damages, direct or indirect, done to people, animals or any goods resulting from a wrong utilization of the equipment.

The company reserve the right to introduce modifications and upgrades to this manual and the equipement without notice even to equipments of the same model described in this manual but with a different serial number.

E. Specific terms

Qualified staff : Trained persons with required experience and knowledge as well as norms and recomendations about accidents prevention and service conditions and who are specifically authorized by the person in charge of security to perform any necessary activity and who are able to detect and avoid any possible hazard.

MEPP : Mobile Elevator Platform for Persons (Vehicle + Lift).

W.P : Working Platform (Bucket).

PTO : Power Take Off.

Warning : Indicates the procedures that, if not followed, may result in serious injuries or even death, or may endanger the operator or exposed persons health.

F. General Characteristics

➢ Dimensional spécifications

1. *13m (K32) without stabilizers*

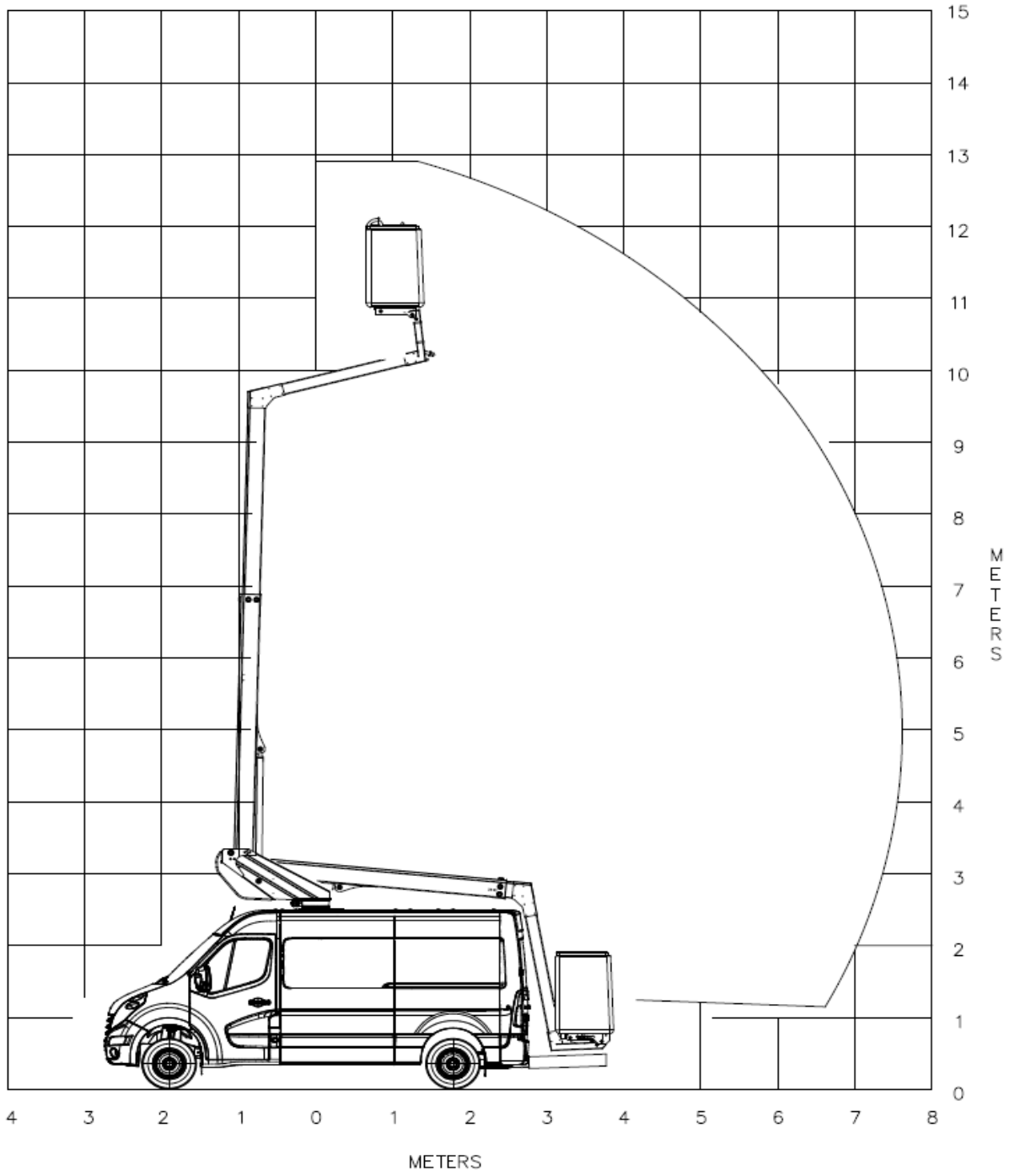

IN A QUEST OF PERPETUAL IMPROVEMENT, KLUBB RESERVES THE RIGHT TO MODIFY THESE CHARACTERISTICS

2. 12m (K26) without stabilizers

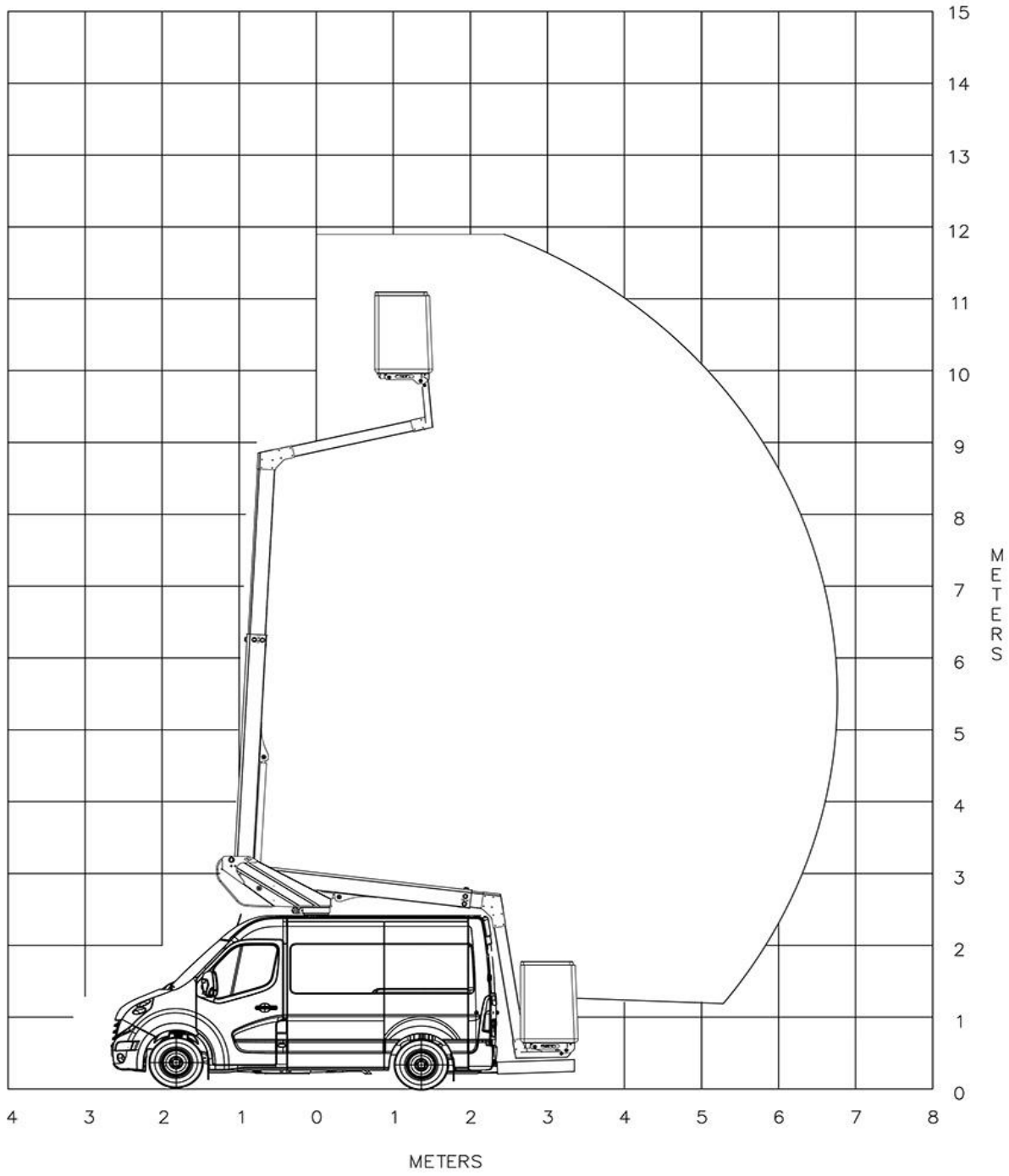

IN A QUEST OF PERPETUAL IMPROVEMENT, KLUBB RESERVES THE RIGHT TO MODIFY THESE CHARACTERISTICS

3. 10m (K21) without stabilizers

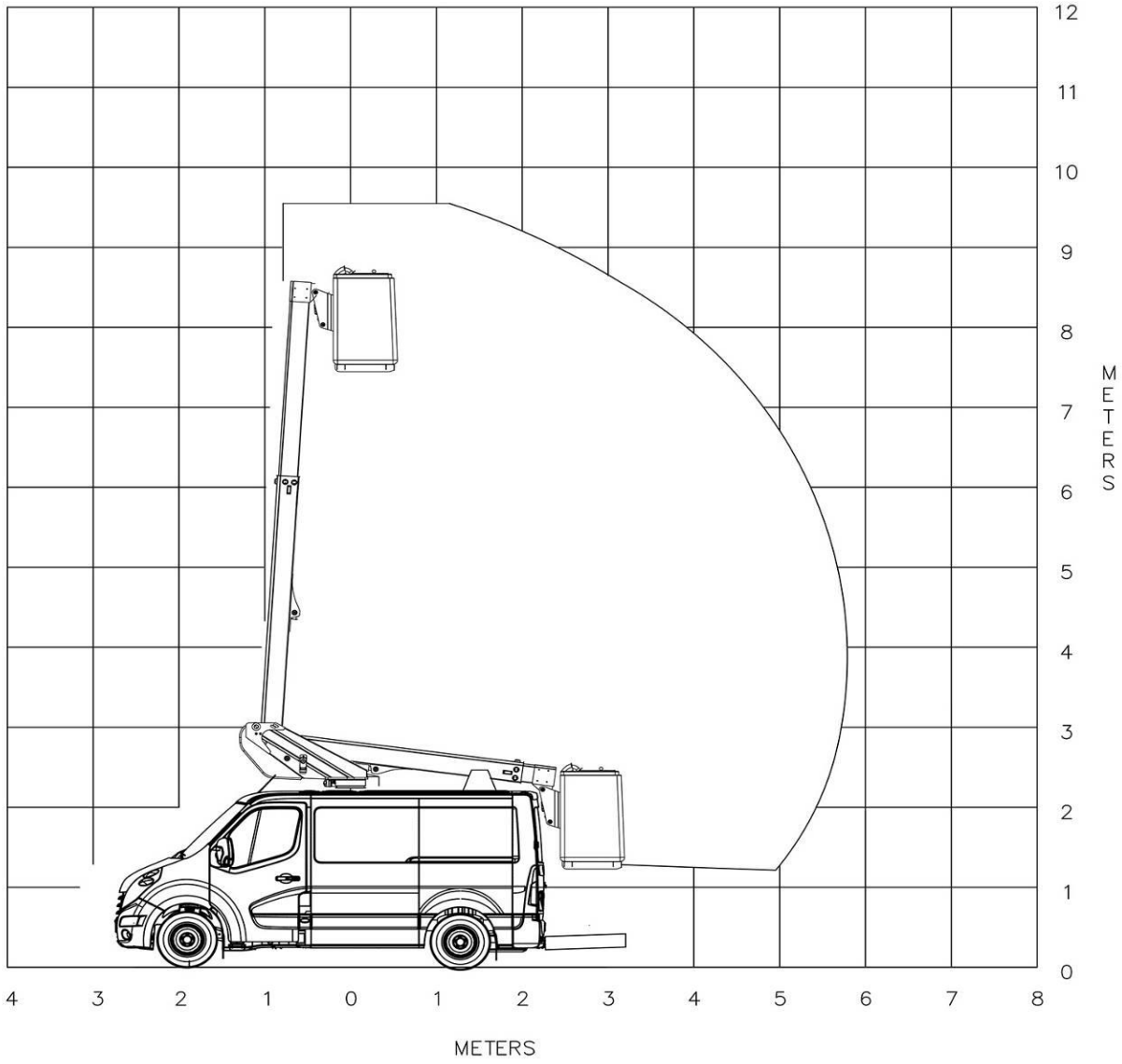

IN A QUEST OF PERPETUAL IMPROVEMENT, KLUBB RESERVES THE RIGHT TO MODIFY THESE CHARACTERISTICS

G. Allowed and not allowed uses

➢ Allowed uses

The MEPP is composed by the bearer vehicle and the lift which is integral part of the machine. It is made to lift persons and work tools, according to the indications, the maximum work cycles intended for the MEPP is 100 000 cycles. According to the EN 280 standard, the 100 000 work cycles, if executed on a regular basis during 10 years should correspond to the following utisation : 50 weeks a year, 40 hours a week, 5 work cycles per hour.

This machine, must be used by trained operators to ensure an absolute security and to avoid any hazard.

➢ Not allowed uses

Any different use from what is specified in the paragraph *II.G.1 : Allowed uses.*

➢ Cases where the builder will not be liable

The builder will not be liable in the following cases :

- Uses not intended in this booklet.
- Improper use of the machine or use by non qualified persons.
- Uses non compliant to norms.
- Lack of scheduled upkeep.
- Unauthorized modifications.
- Removal of seals.
- Use of non original spare parts.
- Failure to comply with the instructions.
- Non filling or signing of the intervention form (See chapter IX F).

➢ Load limiter

On standard, our lifts are not equipped with load limiters, they correspond to reinforced stability criters from the EN 280 norm. Namely, stalibity tests with 150% of the nominal charge (static) and 110% (dynamic) with reduced bucket dimensions.

H. MEPP identification data

See the informations written on the builder's plate to identify clearly the MEPP. This plate is sticked on the column.

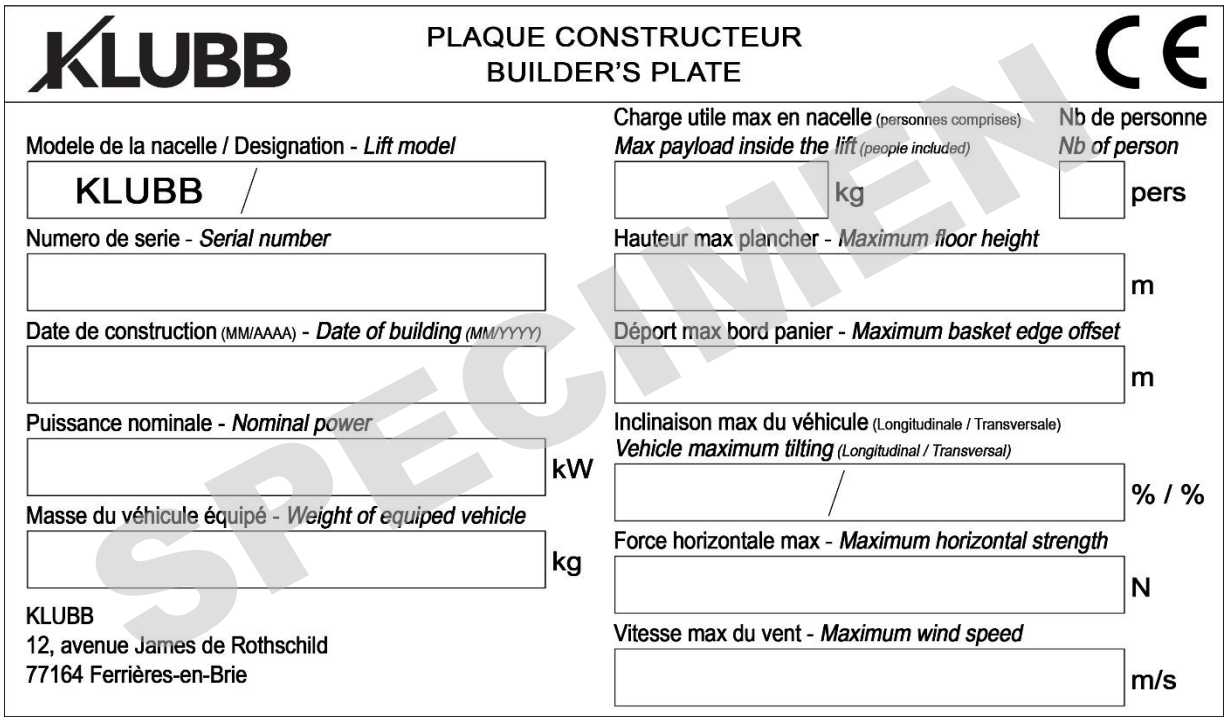

KLUBB

PLAQUE CONSTRUCTEUR
BUILDER'S PLATE

CE

Modele de la nacelle / Designation - *Lift model*
KLUBB /

Numero de serie - *Serial number*

Date de construction (MM/AAAA) - *Date of building (MM/YYYY)*

Puissance nominale - *Nominal power* kW

Masse du véhicule équipé - *Weight of equiped vehicle* kg

KLUBB
12, avenue James de Rothschild
77164 Ferrières-en-Brie

Charge utile max en nacelle (personnes comprises) *Max payload inside the lift (people included)* kg

Nb de personne *Nb of person* pers

Hauteur max plancher - *Maximum floor height* m

Déport max bord panier - *Maximum basket edge offset* m

Inclinaison max du véhicule (Longitudinale / Transversale) *Vehicle maximum tilting (Longitudinal / Transversal)* / % / %

Force horizontale max - *Maximum horizontal strength* N

Vitesse max du vent - *Maximum wind speed* m/s

SPECIMEN

I. Declaration of compliance

Hereunder, specimen of the declaration of compliance CE :

Declaration of compliance CE relating to machines

Builder

Company : **KLUBB**
Adress : 12, av. James de Rothschild 77164 Ferrières en Brie, France
Telephone : +33 (0)1 60 95 12 47
Fax : +33 (0)1 60 05 68 38

Product identification

Description : Mobile Elevator platform for persons (MEPP) type 1 B
Type : **KLUBB K32**
PMEE Serial Number : 150001
Vehicle : Renault Master L2H2
Vehicle Serial Number : VF6MFFESC53485528

Technical datasheet

Without prejudice to its intellectual property rights, the request for information duly motivated on the technical report is possible by letter to the following address:
Adress : KLUBB - 12, av. James de Rothschild 77164 Ferrières en Brie, France

Compliance

This product has been processed and validated in compliance with the machin directive of the 17th of may 2006 (2006/42/CE), the directive relating to electromagnetic compatibility of the 15th of december 2004 (2004/108/CE) and the directive relating to the noise emission in the environment for the equipment used in the open of the 8th of may 2000 (2000/14/CE).
The assembly of the higher structure of the MEPP and its installation on the vehicle have been processed in accordance to the methods defined by the builder and to the camber specifications given by the vehicle builder. The results of all the assembly controls, tests and reviews are registered in accordance to the builders quality process.

No modification of any of the security parts such as control panels, security devices or any options related to the security of the elevator will be authorized without an explicit agreement from the KLUBB company.

Type CE review

This receipt by type has been approved by the following notified organization :
Name : APAVE Parisienne SAS
Identification number : 0060
Adress : 17 rue Salneuve – 75854 Paris CEDEX
CE certificate type : 0060/ 5536 / 760 / 11/15 / 0001

Harmonized standards

Conception, manufacturing, installation, protection and tests of the MEPP have been made in accordance to the european, international ans national standards. The most important are mentioned hereafter :

EN 280	MEPP – Design calculation – Stability criters – Building – Security – Tests and reviews
EN 349	Machines safety – Minimum distance to avoid body parts crushing risks
EN 13849-1	Machines safety – Parts of the control systems relating to safety - Part 1 : General conception principles
EN 13849-2	Machines safety – Parts of the control systems relating to safety - Part 2 : Validation
EN 60204-1	Machines safety – Parts of the control systems relating to safety - Part 1 : General rules
ISO 20381	MEPP – Symbols for the operator's controls and other indicators

Place of statement : Ferrières en Brie, France **Date :** 23/11/2015

Authorized person to write this statement.
Name : Julien Bourrellis **Position :** CEO
Signature :

SPECIMEN

J. Warranty

➢ Terms and conditions

Warranty terms and conditions are specified hereunder :

The company warranty its equipment and undertake to replace, free of charge and as quickly as possible any faulty part (manufacturing and material defects) for a period of 12 months starting from the date of delivery. Any intervention under warranty can be made only at the builder's factory, on the condition that the customer have paid the owed amounts. The equipment to repair delivey and its withdrawal remains at the expense of the customer.

The hereabove warranty will be void if the customer doesn't give the equipement needing repairs within 30 days from the date of his first claim which should be written. Except for fraud or incase of important negligence, the company cannot be responsible towards the customer for any damages relating to the defects of the sold equipement.

Warranty would be void in case the customer would modify the equipment without a written authorization from the company and/or if the equipment is not used correctly. Concerning the equipment and/or the vehicles used and made by the company, the warranty covering any defect last for a period of 30 days from the date of delivery. In any maner, any defect found during this period should be signaled to the seller within 8 days after discovering. Otherwise, warranty would be void.

Warranty will effective only if the upkeep instructions given in this manual have beenrespected.

➢ Request for intervention under warranty and arrangements

Spare parts orders or intervention requests under warranty must be sent to the company as soon as a defect is detected included within the expected conditions. Always specify the type ans serial number of the machine. These informations can be found on the builder's plate on the column.

K. Aftersale service

Concerning the optimal use of the equipment and the maintenance interventions, this booklet does not substitute to the aftersale service experience.

➢ Intervention request

To contact the technical staff, the customer can contact directly the aftersale.

L. Utilisation of the manual

Keep this booklet in a place convenient to all of the users (operators and maintenance staff)

It is very important to read completely this manual before using the MEPP. For any use, maintenance or repair, see the corresponding chapter.

Looking for	See
Instructions, advices and safety procedures.	*Chapter II : General Informations* *Chapter III : Safety Informations*
Identification and description of the machine.	*Chapter II : General Informations* *Chapter IV : Technical descriptive*
Aftersale service, ordering spare parts.	*Chapter II : General Informations*
Machine utilization.	*Chapter V : Activation* *Chapter VI : Emergency proceedings*
Prevention et Maintenance	*Chapter VII : Maintenance*
Dismantling or definitive removal	*Chapter VIII : Dismantling and removal*

Warning : For any other informations on the vehicle, report to the corresponding manual.

This manual must be kept in a protected place inside the vehicle driving cabin allowing it to be easily found in case of necessity for the complete lifetime of the vehicle.

In case of loss or damage made to this booklet, ask for a new copy to the builder specifying the serial number of your equipment. The builder commits to give a new copy.

In case of sale of the used equipment, give this manual and its attachements. It is also necessary to give the name of the new owner to the builder (See Chapter IX.C : Transfers of ownership).

III. SAFETY INFORMATIONS

A. Safety standards

During Engineering and building of this machine, all the security criterions have been taken in account in order to attend to the required standards, especially:

French standards:

- 2006/42/CE directive
- EN 280 Conception computations – Stability criterions - Execution - Security tests and trials

B. Operators capability

Operators using the lift must be properly trained and informed about the security measures to take in account for a safe use of the lift and must own a certificate of training. Operators must be of age and considered physically and psychologically able to use this device.

Especially check for the following points:

- Optimal eyesight and hearing,
- Absence of drugs or alcohol use,
- Psychological balance and absence of dispiritedness and stress

Operators must know legislation about the use of the lift and its traveling on roads. Also, they must be holders of a driver license corresponding to the vehicle.

The Klubb Company might not be considered as responsible of any harm or damages made to person or items subsequent to:

- No respect of security measures
- Use of the device by non-qualified operators
- No respect of all of the recommendations made in this document and displayed on the lift.

It is strongly recommended for operators to be holders of the CACES or any European equivalent.

Also, operators must be formed by the constructor to the specifically use of the machine. When a new operator have to use the lift, please contact us quickly in order to set a new training session.

C. Signaling

On the device, the following plates have been displayed:

- Identification (Fig. 1-1- Identification plate)
- Instructions
- Duties / Forbidding
- Warnings
- Hazards

Warning: Always observe safety instructions displayed on these plates. Any infringement of these recommendations could lead the serious injuries or death to operators and exposed persons. Always check that the plates are applied and readable. If not, please set new plates or replace them.

D. General safety instructions

Respect of the safety instructions allows operators to work safely and efficiently.

Check the efficiency of all of the security device. Immediately report any malfunction to the person responsible in order to make the necessary interventions.

It is forbidden to remove or modify any security or protection device. In case of infringement, warranty would be immediately void and the company would be cleared of any responsibility.

Warning: It is forbidden to remove or disconnect any security device of the machine.

Warning: It is forbidden to use the machine if the security devices are not activated.

According to applicable standards against accidents, when on the platform, **operators must:**

- **Wear a helmet**
- **Wear and hook the security harness** to the ring in the bucket
- The operator on the ground must also wear a helmet.

Also wear adapted protection clothes (non-skid security shoes, reflective vest…). Do not wear any jewellery, open or pensile clothes like ties, scarves that could be hooked by moving elements.

Always keep access devices like handles, guard rails or steps and work surfaces clear and clean in order to minimize risks of slipping and stumbling.

Always use handles, guard rails or steps and do not lean on control devices and oil pipes.

Clean shoe soles before accessing the lift.

Before use, always check for the efficiency of the device which should always be kept clean and in a perfect state of operation by following the maintenance program.

Numerous parts of the lift are made in a special steel with a high elasticity. Never solder on any part of the machine without a written authorisation and instructions from **KLUBB**.

Never use the lift if operators are not trained, it could lead to serious injuries for the operator and other people.

In any case, every user or driver of the machine must conform to the applicable traffic laws in the country where he is.

Closely read this manual before using the machine or making any maintenance operation.

Maximal noise exposure level measured while using the lift is up to **90dB.** Wear adapted ear protection if needed.

This device is made for an **outside use**. Exceptive interior use is allowed if the room is conveniently aired.

It is **FORBIDDEN** to use this machine during stormy weather.

E. Before starting to work

Before starting the engine of the vehicle, always disconnect the Power Take Off (P.T.O)

Before driving, always check that the machine is on the “Travel” position.

Always make the daily controls provided in this manual.

Check the level of the machine before making any movement. Choose the space where you place the vehicle which should be compact, flat and steady. Observe the maximum tilting specified on the builder’s plate.

For vehicles equipped with hydraulic outrigger (option):

1 : Engage the vehicle parking brake.
2 : Take the outriggers out, avoiding to set them on places like manhole covers.

Warning : Always take care not to set the outriggers on your or another person feet. It could results in serious injuries.

For vehicles without hydraulic outrigger (option):

1 : Engage the vehicle parking brake.
2 : Put on the wheel chocks.

If the lift must be installed on the road, or if visibility is diminished, signalizing is compulsory. Use the luminous signalling devices equipped on the vehicle as well as reflective strips and any other elements available.

F. While working

Always make sure that no one (people or animals) is standing in the operating area of the machine. In any manner, avoid contacts with any other element or construction.

It is forbidden to place ladders or any other device on the platform in order to increase the working eight as well as any objects that could increase windage.

It is forbidden to work near high voltage lines. In any manner, always keep the platform at a minimum of 5m from any cable.

It is forbidden to move the vehicle when the operator is inside on the platform (Type 1B lift).

It is forbidden to use the lift as a crane.

It is forbidden to use the lift if overloaded (report to the builder’s plate to check the maximum authorized weight on the platform.

It is forbidden to move the vehicle if it is not fully folded.

Avoid letting objects fall from the platform.

It is forbidden to get in or out the platform during overhead work.

Do not press the platform against structures or constructions**.**

It is forbidden to use the lift if wind speed exceed the amount specified on the builder’s plate.

Use the lift only between eligible temperature (-15°C à +50°C).

Do not use the lift when visibility is insufficient.

Do not stay on the vehicle platform while operating the lift.

It is forbidden to add panels or banners on the lift.

Use of the lower control panel is only authorized in case of emergency. All movements made to reach the working area should be made using the control panel inside the bucket.

If using the lower control panel is necessary**, always proceed slowly and carefully to avoid risks of crushing on the operator inside the platform.**

In case of Oil leakage from the hydraulic system:

Warning : Do not come close to the oil flow, high pressure could induce injuries.

1 : Push the **Emergency Stop** button

2 : Disarm the Power Take Off (P.T.O)

It is forbidden to move the lift or stay in the platform if the security gate is opened

It is forbidden to load/unload any object from the platform while overhead working.

Do not press the platform against the floor.

Do not use the lift if the maximum slope specified on the builder's plate is not respected.

Make sure that no part of the lift can hit the vehicle or any other part of the machine.

It is forbidden to overload the platform. The maximum authorized load written on the builder's plate include the weight of operator(s) **AND** tools or equipment.

Never put arms, fingers or any part of the body in any area of the machine without security devices and without controlling that everything is safely blocked.

Warning: When the lift is in working position, it is **strictly forbidden** to:

1 : Disengage the parking brake

2 : Engage a gear

In order to prevent any movement of the vehicle while an operator is on the platform, or when the lift is not fully folded, a **circuit breaker system** is installed. Moreover, the compulsory use of the wheel chocks prevent any movement of the vehicle if it's parked on slope.

G. While finishing or interrupting work

Take care when pulling the outriggers up (option).

It is forbidden to leave the lift without watch and without ensuring that the engine is shut down, the parking brake is engaged, the control panels are blocked and the platform is out of reach.

H. Security measures while maintenance

Any maintenance not listed in this manual must be made only by staff authorized by the company. **In any case always proceed carefully and with maximum security measures.**

During any maintenance operation, the emergency stop button must be pushed and the vehicle engine stopped. The lift must also be folded or supported.

Respect the environment: Avoid oil leakage during tank filling and used oils must be eliminated according to applicable laws.

If using the lower control panel is necessary**, always proceed slowly and carefully to avoid risks of crushing on the operator inside the platform.**

Do not use gasoline, solvents or any flammable liquids. Always prefer authorized, non-flammable and non-toxic cleansers.

While using compressed air, always wear safety glasses with lateral protections keep air pressure to a maximum of 2 atm (1.9bar).

Never use open flames as a lighting device during maintenance operations.

Ensure that all elements of the hydraulic system are safely closed.

Before unmounting any part of the hydraulic system, ensure that there is no oil or other liquid under pressure. Oil projections can be almost invisible and have sufficient force to penetrate under the skin, never unmount parts with hands, use appropriate tools.

THE KLUBB COMPANY MIGHT NOT BE CONSIDERED AS RESPONSIBLE OF ANY HARM OR DAMAGES MADE TO PERSON OR ITEMS SUBSEQUENT TO NON RESPECT OF INSTRUCTIONS LISTED ABOVE.

IV. TECHNICAL DESCRIPTIVE

A. Parts of the lift

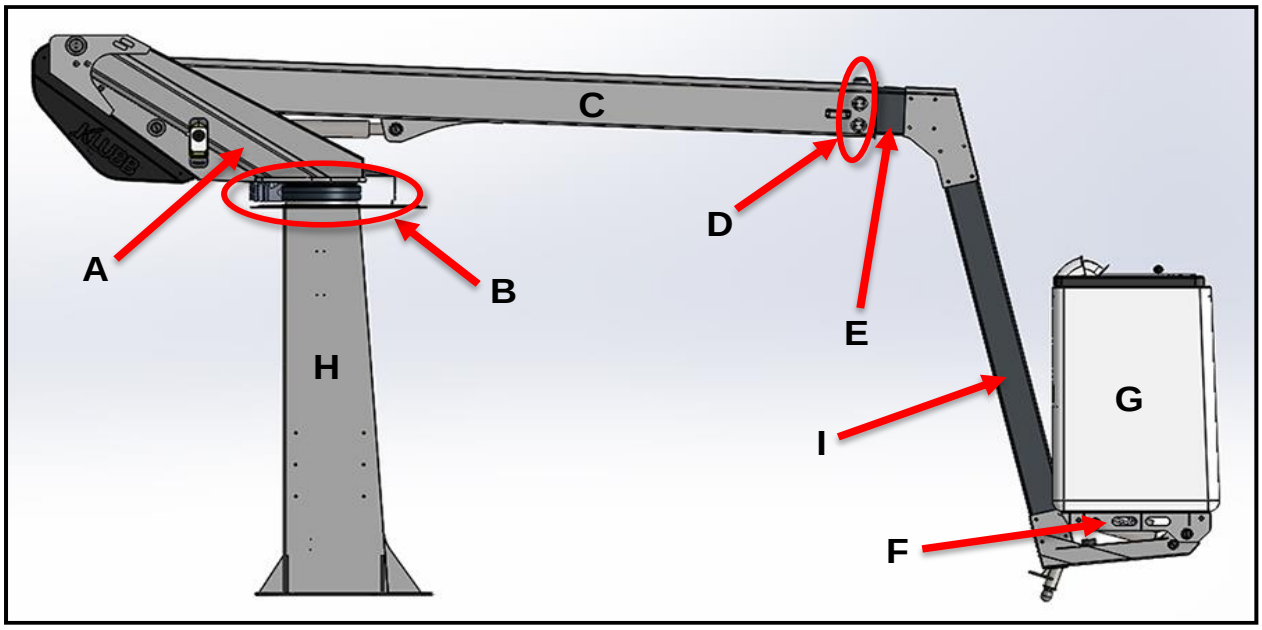

Index	Elément
A	Turret
B	Hydraulic rotation motor
C	Main boom
D	PTFE chock
E	Telescopic boom
F	Bucket holder
G	Bucket (1 or 2 persons)
H	Column
I	Flyboom

BUCKET

Fiberglass bucket, opening on sidewalk side / Aluminium bucket, opening on sidewalk side

HYDRAULIC LEVELING

Automatic leveling bucket with master/slave hydraulic outriggers. Leveling can be manually controlled from both of the control panels.

SECURITY RING

A security ring is installed inside the bucket to allow hooking of the operator's security harness.

TELESCOPIC BOOM

Made of a tubular steel mast articulated on the turret and an aluminum telescopic mast sliding on PTFE chocks.

All movements (ascent/descent, extension/retraction) are allowed by two double acting hydraulics outriggers equiped with by-pass valves.

Rotation is made by a reducer mechanism drives by a hydraulic motor.

COLUMN

The column is made of a tubular base with an oil tank and a deck assembled to the floor of the vehicle. Fastening is ensured by bolting directly around the cross members of the chassis frame.

The inside of the column receive the emergency electric pump and security devices.

On the outer side, the electrical main box, the time meter and the emergency control panel are installed.

TURRET

360° non-continuous rotation. The turret receives the hydraulic distributor and the rotation mechanism.

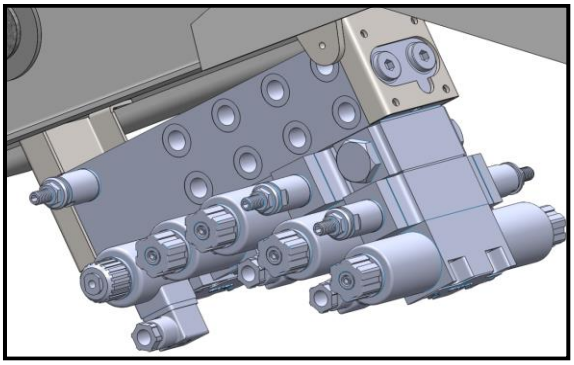

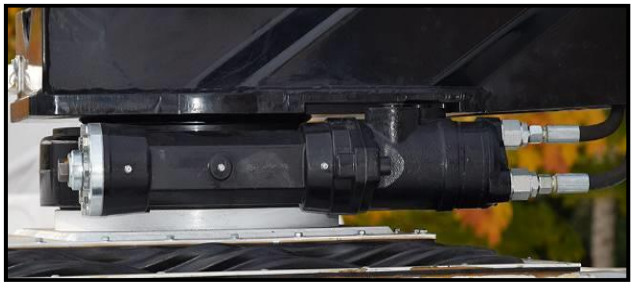

MAIN HYDRAULIC POWER SYSTEM

The main hydraulic power system is powered by a gear-type oil pump drived by a power take off mounted on the gearbox of the vehicle.

The outflow / pressure torque is 11 L/mn / 150 bars is given by the engine of the vehicle running at idle.

AUXILIARY HYDRAULIC POWER SYSTEM (Emergency)

The auxiliary hydraulic power system is powered by an electric oil pump supplied by the vehicle battery.

CONTROL PANELS

In order to avoid multiples hydraulic pipes in the boom the control panels are fully electric. They consist in a set of joysticks and button on a box fastened to the bucket (for the upper one) or on a wired remote control. These control panels both allows using the emergency hydraulic power system.

The emergency shutdown and engine start/stop commands are available on these panels. For security reasons, priority is given to the downer control panel.

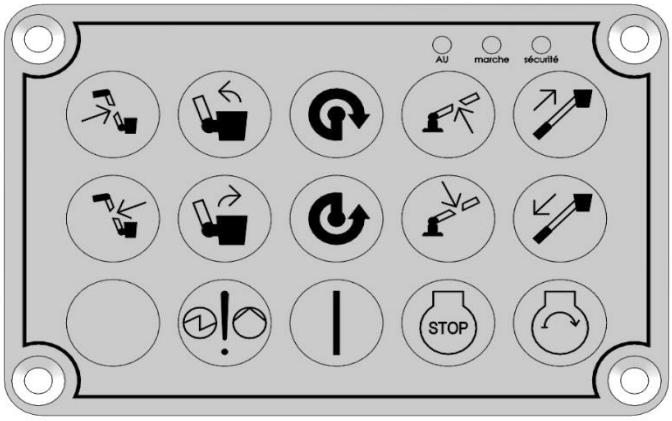

SAFETY DEVICES

- Internal leakages are prevented by driven check valves that block the outriggers in case of failure of the hydraulic system.
- A pressure relief device controls the rotation torque.
- A general pressure relief device keeps the pressure to the recommended level.
- Manual control on the turret in case of system failure.
- Emergency power system with an electric oil pump which can be controlled from both of the control panels.
- Bypass of the emergency shutdown from the downer control panel.
- Self centering joysticks to stop movements when released.
- Security harness ring inside the bucket.
- Parking brake security system.

V. ACTIVATION

Report to Chapter III « Safety Information » and Chapter IV « Technical Descriptive » before activating the lift.

Check that the safety labels are visible:

DO NOT USE THIS ELEVATOR WITHOUT REQUIRED QUALIFICATION AND EXPERIENCE;

AN UNSKILLED OPERATOR COULD CAUSE SERIOUS INJURIES TO HIMSELF AND CLOSE PEOPLE

BEFORE TRAVELING:

Always Check :

- Oil level, water level, battery
- Tire pressure
- Warning lights
- Parking brake
- Emergency power system performance
- Light signalizing

WHEN TRAVELING:

- The lift must be completely folded and inside its support.

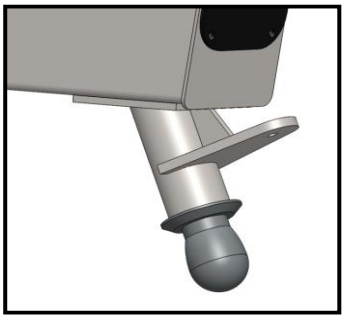

- Make sure the power take off is disengaged

- Check that the « Forbidden travel » warning light inside the cabin is off

  If enlighted, check if:

  - Power take off is engaged
  - The lift is not fully folded or put in its support
  - Hydraulic outriggers (option) are not fully folded up

POSITIONING FOR WORK:

The vehicle must be parked on a hard floor with a maximum tilting abiding by the maximum values indicated on the builder's plate.

If the elevator is equiped with hydraulic outriggers, avoid setting them on a weak ground that could move or collapse with the vehicle weight. Moreover, take care that the veicle's wheels always keep contact with the ground or wheel chocks.

Keep the working area clean and cleared.

Never work with the boom in a non signalized area. Use devices like cones to warn pedestrians and motorists of your attendance.

When using the lift, the bearing strength induced by the wheels or the hydraulic outriggers (option) are up to 15 kN.

BEFORE USING THE LIFT:

Before using the lift, check for oil leakages on the hydraulic power system, on the ground, the roof or under the vehicle and on the main boom.

Check also that the vehicle is correctly positioned on the working area.

If the machine has not been used for a long period or if it has had maintenance, begin by making the elevator move in every direction using the downer remote control. This process allows removing eventual air bubbles remaining in pipes which could cause sudden and unexpected movements.

Also, the operator MUST:

- Engage the parking brake
- Place the gearshift lever to neutral position (no gear engaged)
- Switch on the ignition, letting the engine at idle
- Engage the power take off
- Swith on the light signalizing
- Mark the working area
- Put the wheel chocks
- Close the doors of the vehicle

ACCESSING POSITION

Accessing the platform must be done only when the elevator is fully folded and in traveling position (Report to Chapter. V.)

B. Position and description of the main elements

Elevator on van-body vehicle

Index		Function
A		**Downer remote control** (See downer remote control part hereunder)
B		**Control panel selector** Installed on the side of the main electric box, this switch allows choosing which control panel is active.
C		**Time meter** Amount of hours the machine have been used (1hour = 50 km)
D		**Upper control panel (bucket)** (See upper remote control part hereunder)
	D1	**Movements joysticks** These joysticks control the rotation of the turret and all the movements of the main, telescopic and fly booms. They may also control the hydraulic outriggers (optional). First, select the movement, and then push the speed control joystick.
E		**Controls and warning lights in the driver's cabin**
	E1	**Power take off switch** Allows to engage the power take off which powers the elevator.
	E2	**Light signalizing** Switch the various lights signalizing on the vehicle. Can work even if the ignition switch is off.
	E3	**Forbidden travel warning light** When it's on, this light warns that hydraulic outriggers are out or that power take off is engaged. **Moving the vehicle is forbidden if enlighted**

Downer remote control

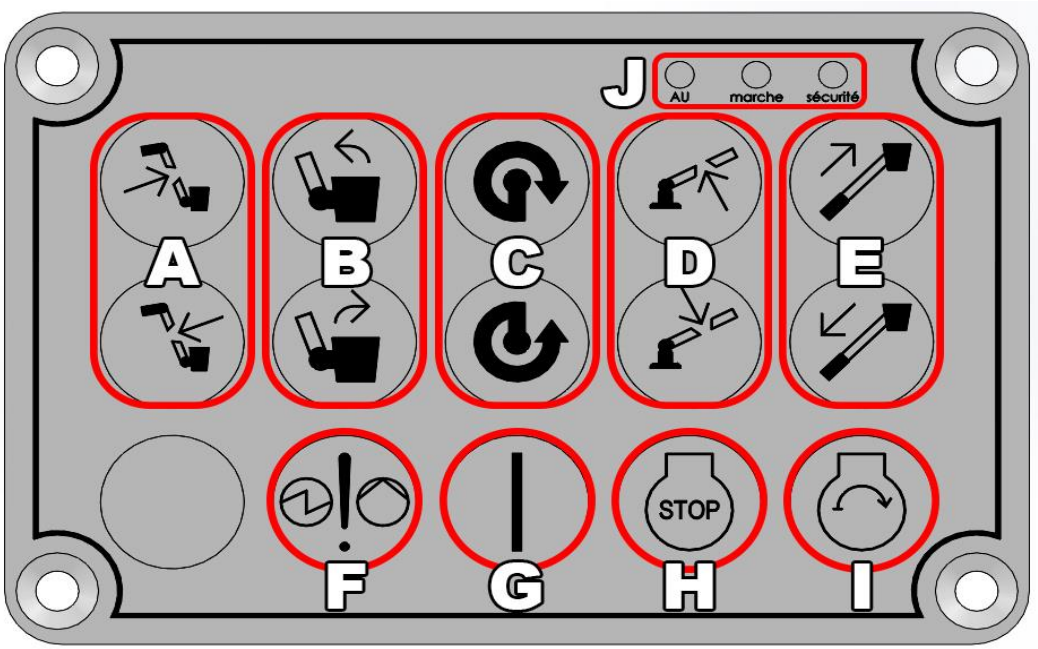

A	Fly boom upward / downward (optional pendular boom)
B	Bucket leveling
C	Turret rotation
D	Main boom control (ascending / descending)
E	Telescopic boom extension/ retraction
F	Emergency electric oil pump : Press this button, then the desired movement. This allows movement powered by the battery of the vehicle. **Never use more than 30 seconds continuously**.
G	Consent: Push this button, then the movement to make the elevator move.

H	Vehicle engine switch off
I	Vehicle engine switch on
J (leds)	**AU** : Emergency shutdown engaged
	Running : Normal operating condition
	Security : Safety device engaged
K	Emergency shutdown (on the remote box) : Push the button for an immediate shutdown of all the elevator. Turn clockwise to reactivate.
L	Override (on the remote box) : Allows to ignore safety device. **For emergency only**

Upper control panel

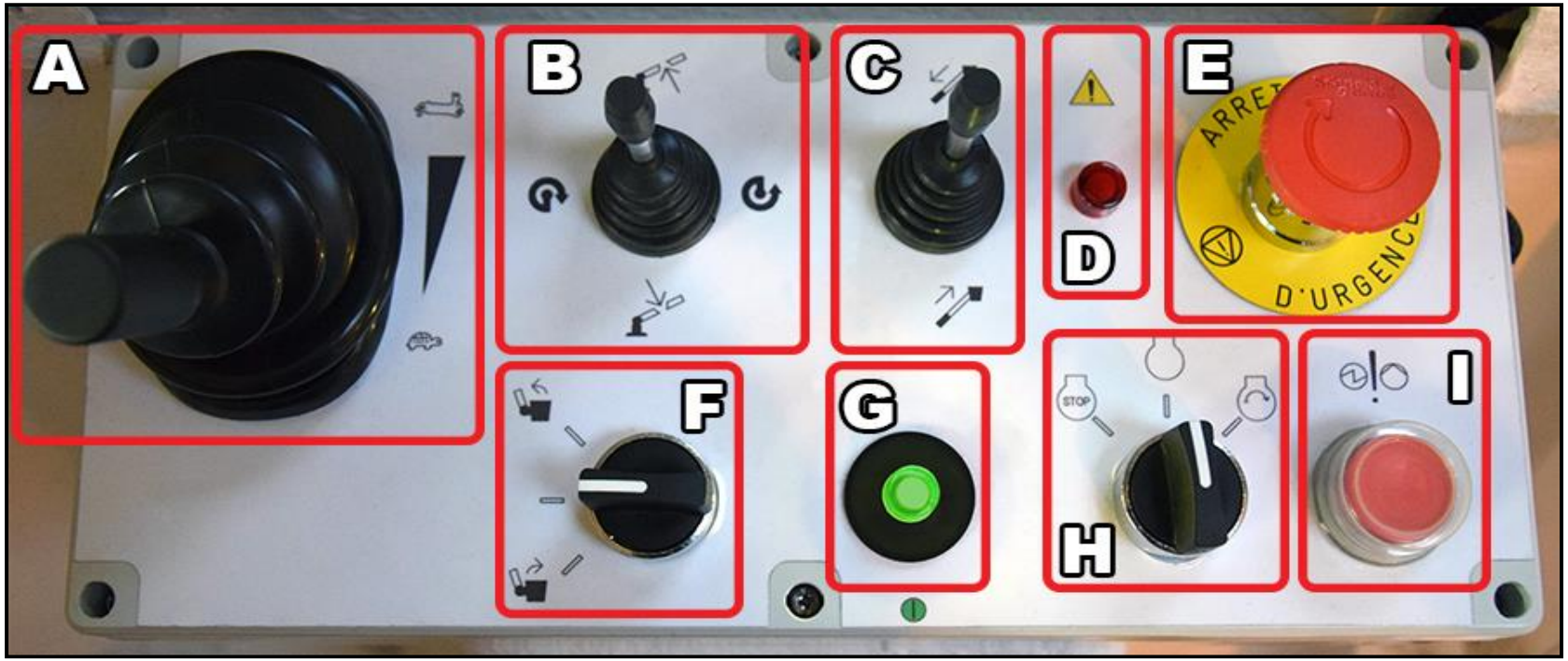

A	**Speed selector:** Set the speed of all the movements of the elevator. Select the movement first, then the speed To stop, release the speed lever, then the movement joystick.
B	**Up/Down:** Ascent/Descent of the main boom. **Left/Right:** Turret rotation.
C	**Up/Down:** Extension/Retraction of the telescopic boom
D	**Warning light:** Problem detected or emergency shutdown engaged.
E	**Emergency shutdown:** Push for an immediate shutdown of all the elevator. Turn clockwise to reactivate.

F	Bucket leveling
G	**Running light:** Enlighted during normal operation
H	Vehicle engine Start/Stop
I	**Emergency pump:** Hold the desired movement, then this button for movements powered by the vehicle's battery. **Never use more than 30 seconds continuously**.

C. Elevator's operation

Now you're familiar with all the controls of this **KLUBB** elevator, here are the steps to follow to use this machine.

USING THE LIFT FROM THE BUCKET (Upper control panel) :

- Park on a firm and steady ground with wheels oriented straight
- Engage the parking brake to the maximum
- Put the gear shift to the dead center
- Leave the ignition switch on, **engine running at idle**
- Declutch, engage the power take off, Clutch
- Switch on the light signalizing
- Lock the driver's cabin
- Put cones around the working area
- Set the wheel chocks
- Select the upper control panel using the switch on the main electric box.
- Open the gate and enter in the bucket. Close the gate.

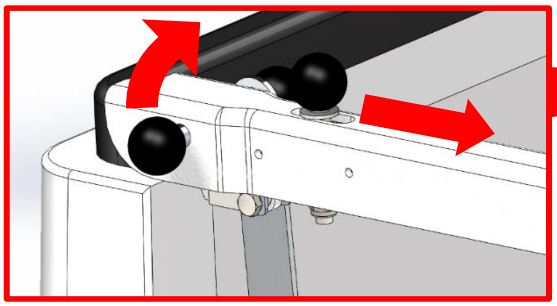

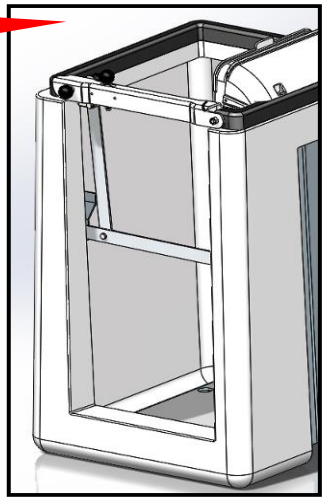

1. Pull the latch
2. Pull up the handle
3. Enter in the bucket
4. Close the gate, the latch must lock

- Secure the harness to the security ring

ONE PERSON MAXIMUM ON A RING

- Use the hydraulic outriggers for stabilisation (optional).

WARNING: BEFORE USING THE STABILISATORS always check the area where they will be set (chose a firm and steady ground, avoid manholes, make sure not to crush someone's feet), use the apportionment plates.

Make the elevator ascent (main boom rise): **This must always be the first move to make with the lift** in order to pull the bucket out of its support (slow speed only, 0.5m elevation minimum).

Once all of these steps have been followed, the elevator can be used normally to make all the movements necessary to the work. Note to always keep a minimum security distance with electric wires and any obstacles around you.

- Before folding the elevator back to its support, always check that:
  - The telescopic boom is fully returned
  - The pendular fly boom (optional) is fully returned.
  - The bucket is horizontal
  - The main boom is in the vehicle axis

- **For a platform vehicle :** Use the two triangular indexers on the column and the turret. They must be aligned.

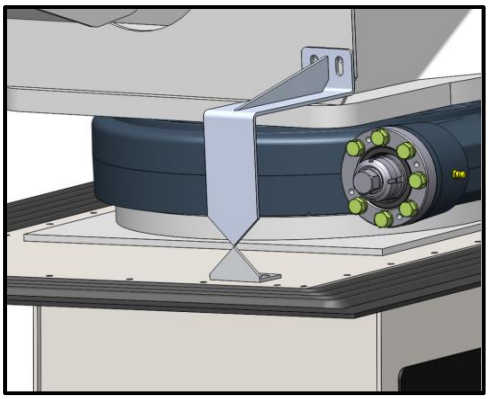

- Once these elements are checked ; you can descend the main boom until you reach the bump stop.

USING THE LIFT FROM THE GROUND (Downer remote control) :

- Follow the same process as for using the lift from the upper control panel except that you need to select the downer remote control with the switch on the main electrical box.

- The downer remote control is hanged on a support on the column.

VI. EMERGENCY PROCEEDINGS

Emergency proceedings might be necessary in case of inability of the operator or machine malfunction.
This chapter is made to assist the operators during these procedures.

IN CASE OF EMERGENCY,

THE MAIN PRIORITY IS ALWAYS THE SAFETY OF THE OPERATORS

BEFORE ANY EMERGENCY PROCESS, CHECK THAT THE ELEVATOR IS NOT CONNECTED TO ANY UNDER VOLTAGE DEVICE. IN FACT, TOUCHING FROM THE GROUND AN UNDER VOLTAGE VEHICLE MAY CAUSE SERIOUS INJURIES OR DEATH.

A. Emergency shutdown

Red palm button installed on both of the control panels.

TO ACTIVATE THE EMERGENCY SHUTDOWN, PUSH THE BUTTON

This will immediately stop the engine of the vehicle and all the functions of the elevator.

Turn clockwise to reactivate the machine.

B. Emergency pump

In case of failure of the main source of energy (vehicle engine), an emergency pump powered by the battery of the vehicle is installed.

To activate this device, select the movement, then push the emergency pump button.

- **Only use the emergency pump if the vehicle engine is off.**
- **This device must never be used continuously for more than 30s.**

The emergency pump can be activated from both of the control panels, it is not necessary to use the speed lever.

C. Overriding

In case of emergency, emergency shutdown and movement limitations can be ignored in order to return the elevator.

Overriding the emergency shutdown : Hold the button to the right

Overriding the limitations : Hold the button to the left

Use then the controls normaly to return the elevator back to its support.

IMPORTANT : OVERRIDING MUST ONLY BE USED IN CASE OF EMERGENCY PROCEEDINGS

D. Hydraulic distributors

If both of the control panels are out of order, the lift can be operated using the hydraulic distributors on the turret if the hydraulic power system is enabled.

Remove the safety hood to access the distributors.

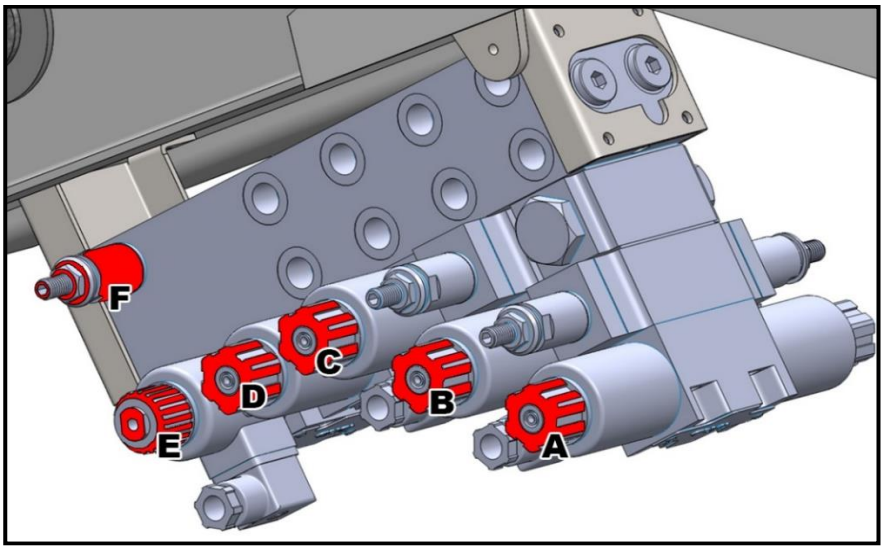

Index	Function	Left distributor	Right distributor
A	Horizontality management (Bucket levelling)	Forward tilting	Backward tilting
B	Turret rotation	Clockwise rotation	Counterclockwise rotation
C	Telescopic boom	Retraction	Extension
D	Main boom	Descente	Montée
E	Flow regulator	-	-
F	Pressure relief	-	-

Remove the cap of the distributor.

Screw the clamp (provided with the elevator) on the distributor and turn the head to push or release the distributor (If you don't have the flange, you can use a screwdriver to push on the center of the distributor).

Use the flow regulator to manage the speed of the movement. (See « E » on the hereabove scheme).

E. Outriggers driving

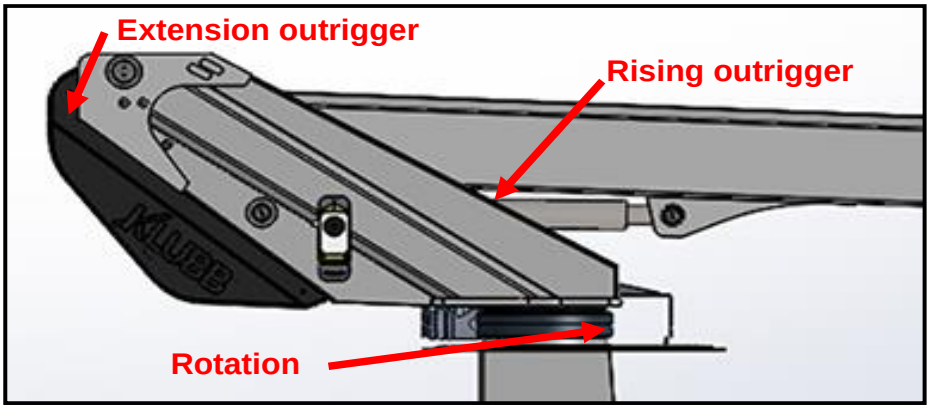

➢ ***Extension outrigger :***

WARNING : DO NOT USE THIS METHOD WITHOUT CONSTRUCTOR'S AUTHORIZATION.

If all of the hydraulic power sources are out of order, the elevator can be returned using the outrigger's driving screws.

This maneuver will release oil from the outrigger. The more the lift is vertical, the more this maneuver will be effective.

Descending speed increase with screw releasing.

To return the telescopic boom, unblock the lock nut with a 17mm open end wrench and unlock the screw by quarter turn with a 5mm allen wrench. Then push on the « retraction » distributor (See Chapter VI D).

Release the distributor to stop the movement.

AFTER USING THIS PROCESS ALL THE OUTRIGGERS MUST BE ADJUSTED BY A QUALIFIED OPERATOR BEFORE ANY USE OF THE ELEVATOR

Make sure that there is no obstacle in the way when the lift is returning.

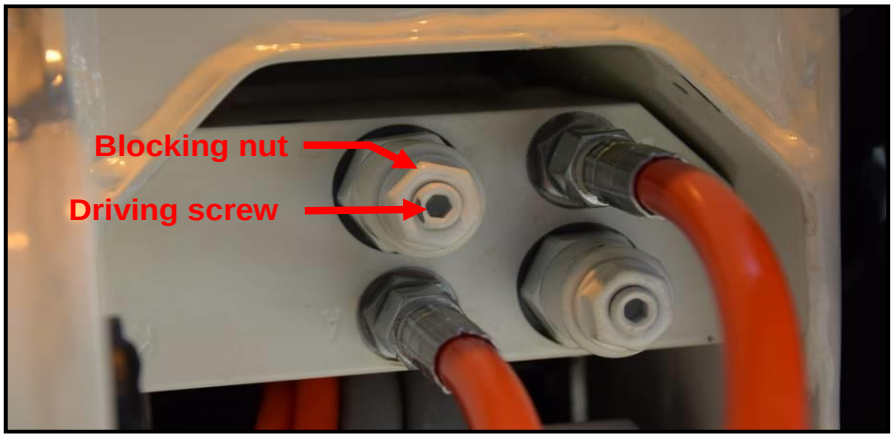

➢ ***Rising outrigger :***

WARNING : DO NOT USE THIS METHOD WITHOUT CONSTRUCTOR'S AUTHORIZATION.

If all of the hydraulic power sources are out of order, the elevator can be returned using the outrigger's driving screws.

This maneuver will release oil from the outrigger. The more the lift is vertical, the more this maneuver will be effective.

To return the telescopic boom, unblock the lock nut with a 17mm open end wrench and unlock the screw by quarter turn with a 5mm allen wrench. Then push on the « descent » distributor (See Chapter VI D).

Release the distributor to stop the movement.

AFTER USING THIS PROCESS ALL THE OUTRIGGERS MUST BE ADJUSTED BY A QUALIFIED OPERATOR BEFORE ANY USE OF THE ELEVATOR

Make sure that there is no obstacle in the way when the lift is returning.

WARNING : DESCENDING SPEED INCREASE WITH SCREW RELEASING. UNSCREWING TOO MUCH OR TOO QUICKLY CAN RESULT IN A SUDDEN DROP OF THE MAIN BOOM AND CAUSE SERIOUS INJURIES OR EVEN DEATH.

THIS PROCEEDING MAY BE DANGEROUS. THE OPERATOR MUST CHECK THAT THERE IS NO OBSTACLES IN THE WAY OF THE LIFT AND UNBLOCK THE SCREW SLOWLY

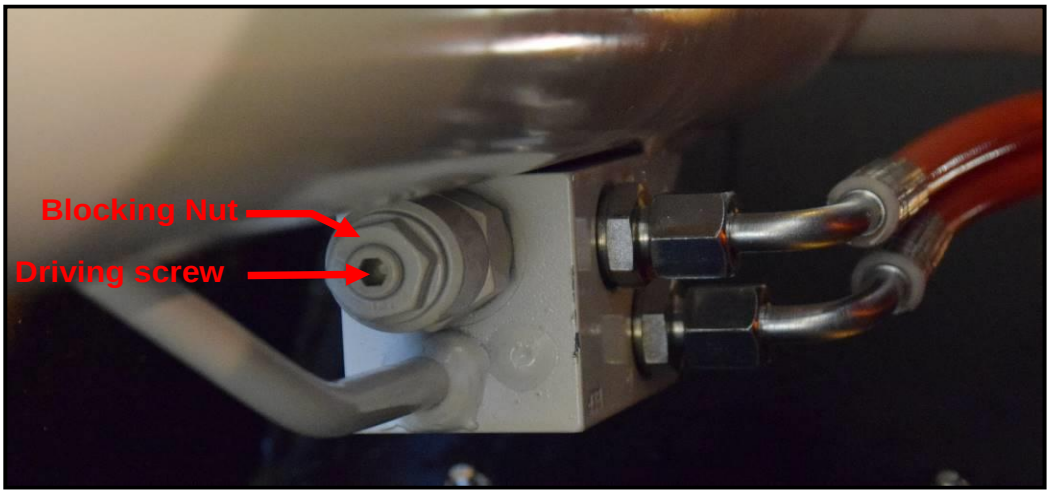

- ***Manual rotation :***

If all of the hydraulic power sources are out of order, rotation can be proceeded manually.

To avoid damaging the slewing ring, pressure must be released by unblocking slightly the oil pipes connected to the ring with a 17mm open end wrench.

Remove the protective hood with a 5mm allen wrench, then a 19mm socket to turn the hexagon. A clockwise rotation maket the turret turn counterclockwise and vice versa.

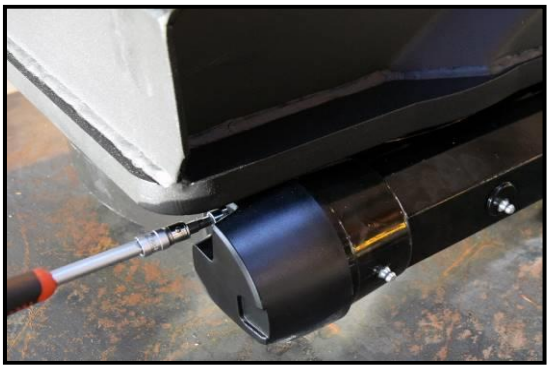

Circuit breaker (available with optional GreenPack) :

Our boosting batteries comes with a circuit breaker allowing isolation if needed (battery failure, overheating, burning…).

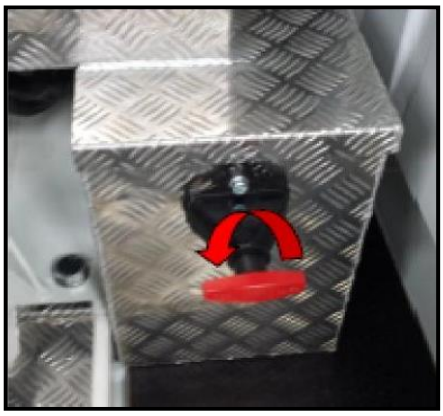

To activate the circuit breaker, turn the red lever counterclockwise.

VII. MAINTENANCE

Warning : Any maintenance operation non listed in this manual must be authorized by KLUBB and made by its authorized operators.

Warning : Using non original or non authorized by the maker spare parts cancel warranty and free the company from any responsability.

Warning : Concerning safety and/or health affecting devices only use spare parts authorized by the KLUBB company.

Warning : Except with a special authorization from KLUBB, it is strictly forbidden to modify the elevator.

Any maintenance operation must be made in accordance with the instructions given in Chapter III:

- Push the emergency shutdown button
- Switch the engine off
- Wear your safety equipment
- Disconnect the machine from any power source

FOR MAINTENANCE, ALL THE NECESSARY MOVEMENTS MUST BE CONTROLLED FROM THE DOWNER REMOTE CONTROL AND WITHOUT ANY PERSON IN THE BUCKET.

Concerning controling the upper control panel, make the required movements whil keeping the bucket as close as possible from the ground.

When using the elevator from downer remote control (emergency), remember that, as there is an operator in the bucket or in the working area, a risk of crush is existing in case of wrong maneuver. Always proceed as slowly and carefully as possible.

A. Daily checkings

Everiday, a visual checking of the machine is necessary in order to turn up and anticipate any flaw before they become serious. A particular care should be given to the following details:

- Hydraulic leakages: Shown by hydraulic oil spilled on or under the vehicle, on its floor or in the boom.
- Tires : Prospective damages, properly inflated
- Hydraulic oil level
- In winter, Take care about making a freeze protection or adding antifreeze liquids.
- Bucket : Check that the bucket has no cracks or damages on its side and also on its bottom. In case of If a problem turns up, the bucket must be repaired by a qualified operator before any use.
- Hydraulic pipes : Check for cracks and any damage.
- Electric wires : Check for cracks and any damages.
- Elevator boom : Battered, scratched paint.
- Hydraulic outriggers pads (optional) : Check for damages
- Bolts and nuts : Check for loosening signs. Give particular care to bolts and nuts with blue laquer. Check also harness rings fastening.

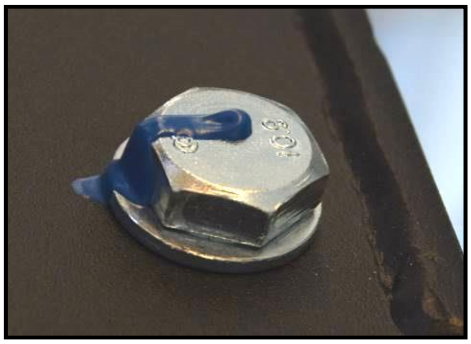

Bolts and nuts with blue laquer ensure a torque compliance. This blue laquer also immediately shows if the bolt is loose or has been removed. If the seal is broken, the screw must be changed by an equivalent one and tighten by an authorized operator only.

The adjacent photo shows blue laquer on a bolt correctly applied as a torque security control.

- Solders : All the solders must be checked. Any cracks are a serious indicator of wear and tear of these solders. Check especialy for solders on top and at the bottom of the column, on the bucket support, on the fly boom superior and inferior connector.

B. Weekly checkings

Besides the daily checkings, each week have a look to :

- Operating of the downer remote control by using all of its functions and particularly the emergency pump
- Emergency shutdown : Test both of them (one on each control panel)

C. Bimonthly checkings

Besides the daily and weekly checkings, every two months, check for :

- Emergency power system : check if the buttons are operating
- Grease the slew ring

D. Biannual checkings

Besides the abovelisted checkings :

- Change the hydraulic filters
- Check the quality of the hydraulic oil : If dirty or emulsioned, drain and change it
- Control pressure calibration (150 bars)

E. Compulsory maintenance after 1 year or 500h of use (whichever comes first)

Fill in the following checklist during the maintenance. Get copies of this checklist simply by asking for it to **KLUBB**.

Yearly / 500h maintenance (Whichever comes first)								
Checkings	**1 year or 500h**		**2 years or 1000h**		**3 years or 1500h**		**4 years or 2000h**	
	Date	**Hours**	**Date**	**Hours**	**Date**	**Hours**	**Date**	**Hours**
Hydraulic leakage								
Oil filter change								
Oil change								
Operating pressure								
Hydraulic connectors condition								
Slew ring condition and greasing								
Rotation motor condition and greasing								
Greasing								
Outriggers condition								
Bucket condition								
Fastenings torque								
Electrical wiring condition								
Corrosion and distorsion								
Emergency power system performance								
Power take off performance								
Elevator performance								
Signature :								

Observations :

F. Hydraulic oils / filters

The elevator is supplied with hydraulic oil (TITAN FUCH H32 oil). This oil is made for use in « temperate climates » in standards temperatures. H46 oil is also suitable but its compulsory to use a HV type oil

The oil filter must be changed the first 30 days of use and then after 1 year or 500h of use (whichever comes first).

Pump cavitation and noisy operation are due to a clogged filter, a low oil level or too cold outside temperature for the oil type.

To change the oil filter, unscrew the filter block and change it by a new one. Take care to lightly oil the gasket.

G. Greassings

➢ Slew ring

The slew ring is supplied correctly lubricated.

- Used grease : VANGUARD SILEX PLS/3
- Operating temperature : -35/+130°C

Compliant greases :

- TOTAL CALORIS M/3
- FINA BENTEX 5M
- SHELL RETINAX HDX
- MOBIL MOBILGREASE SPECIAL
- FUCHS RENOLIT FLM/2
- BP GREASE LTX/2M
- AGIP GREASE SM/2
- CASTROL MOLY GREASE/2

Lubricating frequency :

Conditions of use	Lubricating frequency
Clean and dry environment mild climate.	Every 300h of use Or every 6 months
Dirty, dusty or sandy environment, seasides.	Every 200h of use Or every 4 months
Extrem conditions	Every 70h of use Or every 2 months

H. Guarantee claim

Guarantee claim is conditioned by the maintenance according to the procedures and delays given.

At the end of this manual, you'll find a chapter made for the tracking of this proceedings.

I. Diagnostic

This chapter contains a list of problems that may occur during the use of this machine.

Contact the customer service for any problem non listed hereunder or if the problem is persistent after the intervention of the operator.

User
Maintenance operations which can be made by the user can be proceeded safely after reading carefuly all the instructions in this manual.

Maintenance operator
Interventionswhich can be executed by the maintenance operator can only be safely made by qualified, trained and authorized personal. They also must have read all the instructions in this manual.

Problem	Cause	Solution	Operator
General			
No movement	No electrical power	Activate	User
	Vehicle door opened	Close the door	User
Power take off/pump			
Aucun mouvement de la P.T.E.	Power take off doesn't work	Activate	User
		Control the installation of the power take off	Maintenance operator
	Hydraulic pump doesn't work	Pressure control	Maintenance operator
	Hydraulic pipe broken	Product support service	Maintenance operator
	Pressure relief wrongly calibrated	Calibration	Maintenance operator
	No hydraulic oil	Find the causes and fill the tank	Maintenance operator
	No power in magnetic valves	Control electric power system and fuses	Maintenance operator
Stabilisators (optional)			
Stabilisators do not retuns	The elevator is not completely folded back in its support	Retun the elevator correctly	User
No movement	No electrical power	Control	Maintenance operator
No movement	Mini contact breaker of the boom/stabilisators locking system faulty	Control	Maintenance operator
Stabilisators rough running	Hydraulic pump rough running	Control the pressure and change the pump if necessary	User for control Maintenance operator for replacing
	Excessive wear of outriggers gaskets	Replace part	Maintenance operator
	Blocked valves		

No movement of the elevator			
No movement	Incorrecty leveling of the bucket	Correct the level	User
	Emergency shutdown pushed	Disengage	
	Movement limiter out of order	Product support service	Product support service
	Stroke end devices faulty		
	Incorrect calibration of the pressure relief	Calibrate	Maintenance operator
No movement	Mini contact breaker of the boom/stabilisators locking system faulty	Activate	Maintenance operator
	Movement limiter out of order	Move the elevator using distributors (see chapter VI D.) and control contact breakers	User
	Bucket gate opened	Close the gate correctly	User
	Bucket gate detector faulty	Activate	Maintenance operator
Elevator moving roughly			
Rough movements	Air in hydraulic power sytem	Product support service	Product support service
	Incorrect setting of the electronic card		
	Cylinder rod seized		
	Oil leakages		
	Faulty valves		
	Electrical contacts faulty		

VIII. DISMANTLING AND REMOVAL

A. Operator's ability

Qualified mechanic who have read and understood chapter III about safety as well as this chapter.

B. Dismantling the equipment

As soon as the lifetime has been reached, it must be dismantled. Dismantling must prevent the machine to be used for the needs it was made for and must allows to retrieve primary materials.

The company could not be considered responsible for any harm done to persons or animals as well as damages due to the use of the machine or parts of it for functions different from the original conditions.

C. Dismantling procedure

DISMANTLING AND REMOVAL PROCEEDINGS MUST BE MADE BY QUALIFIED PERSONAL WITH CORRECT EQUIPEMENT

Dismantling procedure:

- Put the machine back in resting position
- Shutdown the engine
- Collect oil in the tank, pipes and cylinders
- Remove all the flexible pipes
- Remove electrical wires

Warning: Give oils to responsible entities for oil removal

Warning: Flexible pipes must be given to responsible entities for recycling

Warning: Electrical wires must be given to responsible entities for recycling

Warning: Steel as well as light alloys parts etc. must be given to responsible entities for recycling as per applicable legislation.

D. Remaining risks after dismantling

By carrying out the dismantling procedure, there will be no remaining risks after dismantling of the machine.

IX. HYDRAULIC AND ELECTRIC SCHEMES

A. Hydraulic scheme

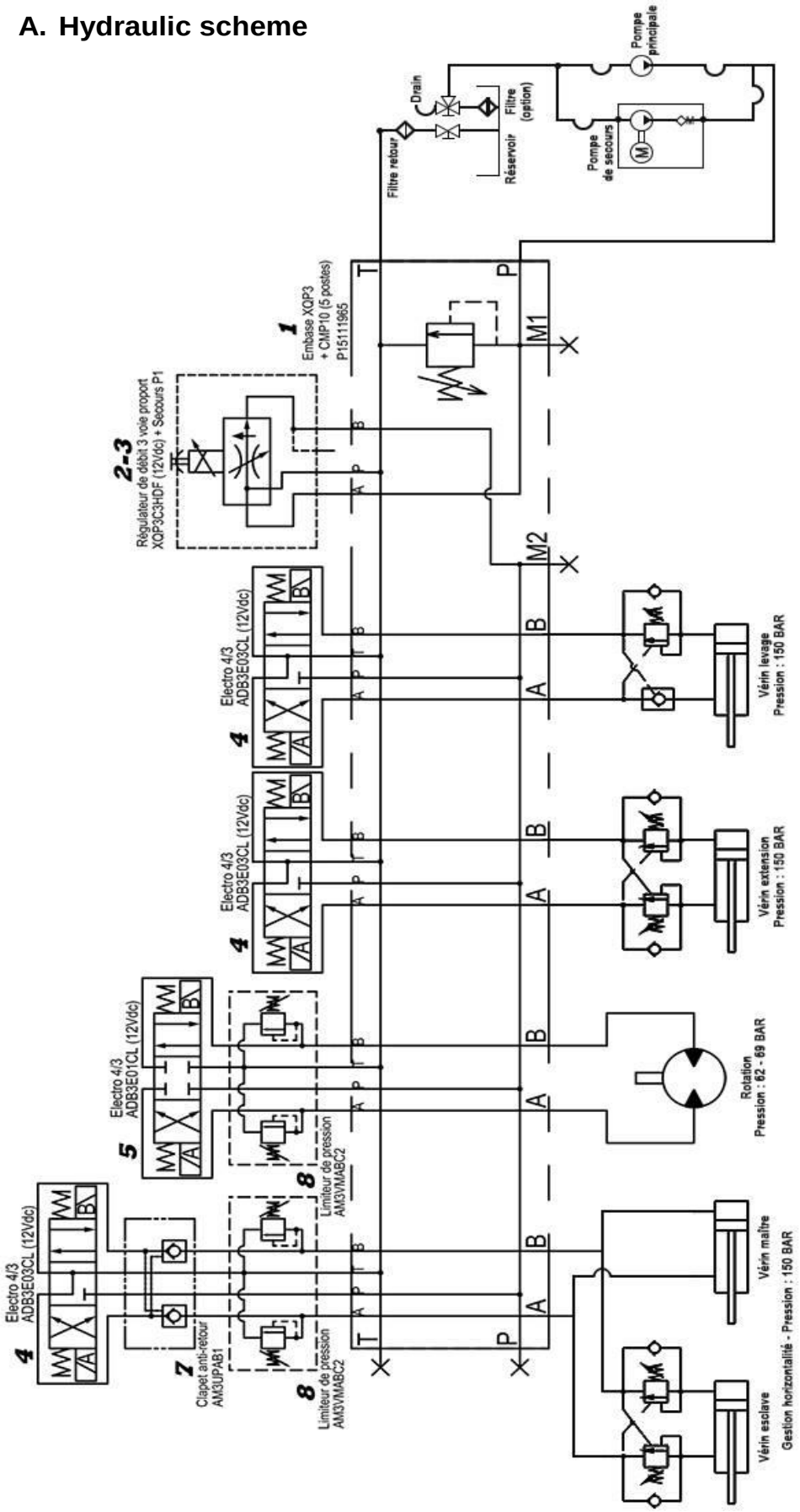

B. Wiring diagrams

CONTROL RECORD

This control record is distributed by KLUBB to the user of the elevator.

A. Instructions for editing

This record is part of the equipment of the elevator and must be joined to the machine until the end of its lifetime.

The instructions in this manual are given according to known elements to the date of the first marketing of the elevator. Other elements may change the user's duties in the future.

This record is made for writing, as per the given schemes, all the events incoming during the life of the elevator.such as:

- Transfers of ownership
- Change and renewal of parts and safety devices
- Maintenance checkings

B. Delivery of the elevator to the owner

The elevator:

Serial number : …….

Date of building : ……..…….

Has been delivered by KLUBB with this control record,

On the (date) : ……

To : ……..……...

According to the conditions set up by the contract, with the technical specifications, dimensions and specific functions in the manual and in this record.

Person in charge from KLUBB	The owner
……	……..

C. Transfers of ownership

Copy to keep :

On the (date) : …… the ownership of the elevator :

Serial number : ……

Year of building : ……

Has been transferred to : ……

……

We confirm that, on the date above-mentioned, all the characteristics of this elevator (technical, functional and dimensional) are complies with the original characteristics and that any deviation is indicated in this register.

Corporate name of the seller : ……

……

The seller	The buyer
……	……

Copy to send to KLUBB :

On the (date) : …… the ownership of the elevator :

Serial number : ……

Year of building : ……

Has been transferred to : ……

……

We confirm that, on the date above-mentioned, all the characteristics of this elevator (technical, functional and dimensional) are complies with the original characteristics and that any deviation is indicated in this register.

Corporate name of the seller : ……

……

The seller	The buyer
……	……

D. Parts change

Date : …… Parts renewed : ……
Serial number : ……
Description of the part : ……
……
Description of the producer : ……
……
Supplier : ……
Reason of renewal : ……
……

Person in charge User
…… ……

Date : …… Parts renewed : ……
Serial number : ……
Description of the part : ……
……
Description of the producer : ……
……
Supplier : ……
Reason of renewal : ……
……

Person in charge User
…… ……

Date : …… Parts renewed : ……
Serial number : ……
Description of the part : ……
……
Description of the producer : ……
……
Supplier : ……
Reason of renewal : ……
……

Person in charge User
…… ……

Date : …… Parts renewed : ……
Serial number : ……
Description of the part : ……
……
Description of the producer : ……
……
Supplier : ……
Reason of renewal : ……
……

Person in charge User
…… ……

Date : …… Parts renewed : ……
Serial number : ……
Description of the part : ……
……
Description of the producer : ……
……
Supplier : ……
Reason of renewal : ……
……

Person in charge User
…… ……

Date : …… Parts renewed : ……
Serial number : ……
Description of the part : ……
……
Description of the producer : ……
……
Supplier : ……
Reason of renewal : ……
……

Person in charge User
…… ……

Date : …… Parts renewed : ……
Serial number : ……
Description of the part : ……
……
Description of the producer : ……
……
Supplier : ……
Reason of renewal : ……
……

Person in charge User
…… ……

Date : …… Parts renewed : ……
Serial number : ……
Description of the part : ……
……
Description of the producer : ……
……
Supplier : ……
Reason of renewal : ……
……

Person in charge User
…… ……

Date : …… Parts renewed : ……
Serial number : ……
Description of the part : ……
……
Description of the producer : ……
……
Supplier : ……
Reason of renewal : ……
……

Person in charge User
…… ……

E. Safety parts renewal

Date : …… Parts renewed : ……
Serial number : ……
Description of the part : ……
……
Description of the producer : ……
……
Supplier : ……
Reason of renewal : ……
……

Person in charge User
…… ……

Date : …… Parts renewed : ……
Serial number : ……
Description of the part : ……
……
Description of the producer : ……
……
Supplier : ……
Reason of renewal : ……
……

Person in charge User
…… ……

Date : …… Parts renewed : ……
Serial number : ……
Description of the part : ……
……
Description of the producer : ……
……
Supplier : ……
Reason of renewal : ……
……

Person in charge User
…… ……

Date : …… Parts renewed : ……
Serial number : ……
Description of the part : ……
……
Description of the producer : ……
……
Supplier : ……
Reason of renewal : ……
……

Person in charge User
…… ……

Date : …… Parts renewed : ……
Serial number : ……
Description of the part : ……
……
Description of the producer : ……
……
Supplier : ……
Reason of renewal : ……
……

Person in charge User
…… ……

Date : …… Parts renewed : ……
Serial number : ……
Description of the part : ……
……
Description of the producer : ……
……
Supplier : ……
Reason of renewal : ……
……

Person in charge User
…… ……

Date : …… Parts renewed : ……
Serial number : ……
Description of the part : ……
……
Description of the producer : ……
……
Supplier : ……
Reason of renewal : ……
……

Person in charge User
…… ……

Date : …… Parts renewed : ……
Serial number : ……
Description of the part : ……
……
Description of the producer : ……
……
Supplier : ……
Reason of renewal : ……
……

Person in charge User
…… ……

Date : …… Parts renewed : ……
Serial number : ……
Description of the part : ……
……
Description of the producer : ……
……
Supplier : ……
Reason of renewal : ……
……

Person in charge User
…… ……

F. Checkings / repairs / maintenance

Date : ……

Checked elements : ……..

……

……....

……

Person in charge of maintenance : …..……..

Date : ……

Checked elements : ……..

……

……....

……

Person in charge of maintenance : …..……..

Date : ……

Checked elements : ……..

……

……....

……

Person in charge of maintenance : …..……..

Date : ……

Checked elements : ……..

……

……....

……

Person in charge of maintenance : …..……..

Date : ……

Checked elements : ……..

……

……....

……

Person in charge of maintenance : …..……..

Date : ……

Checked elements : ……..

……

……....

……

Person in charge of maintenance : …..……..

Date : ……

Checked elements : ……..

……

……....

……

Person in charge of maintenance : …..……..

Date : ……

Checked elements : ……..

……

……....

……

Person in charge of maintenance : …..……..

Date : ……

Checked elements : ……..

……

……....

……

Person in charge of maintenance : …..……..

Date : ……

Checked elements : ……..

……

……....

……

Person in charge of maintenance : …..……..

Date : ……

Checked elements : ……..

……

……....

……

Person in charge of maintenance : …..……..

Date : ……

Checked elements : ……..

……

……....

……

Person in charge of maintenance : …..……..

Date : ……

Checked elements : ……..

……

……....

……

Person in charge of maintenance : …..……..

Date : ……

Checked elements : ……..

……

……....

……

Person in charge of maintenance : …..……..

Date : ……

Checked elements : ……..

……

……....

……

Person in charge of maintenance : …..……..

G. Notes